DECA Lab Logbook — Spring Term

Lab 3 | Task 2: Pipelined Control Path

Task 2: Pipelined Control Path

Objectives

- Understand the structural difference between the pipelined and unpipelined control paths
- Explain why PCNEXT drives MEMADDR in the pipelined design
- Understand the role of the INIT signal during pipeline startup

2.1 Comparison: Lab 2 (Unpipelined) vs Lab 3p (Pipelined)

Examine MEMADDR on the controlpath sheet of lab3p and compare it with the unpipelined lab2 EEP1 control path. Explain how the modification to MEMADDR allows the correct next instruction to be fetched. You may find it helpful to compare the data delays between PCNEXT and INS in the two designs.

Property	Lab 2 (Unpipelined)	Lab 3p (Pipelined)
MEMADDR source	Driven by PC (current instruction)	Driven by PCNEXT (next instruction)
Fetch/Execute overlap	None — sequential	Yes — fetch N+1 while executing N
INIT / INITV	Not required	High only in cycle 0 to prime the pipeline
Memory instructions	LDR/STR handled inline	EXEC2 stage added; pipeline stalls for one cycle

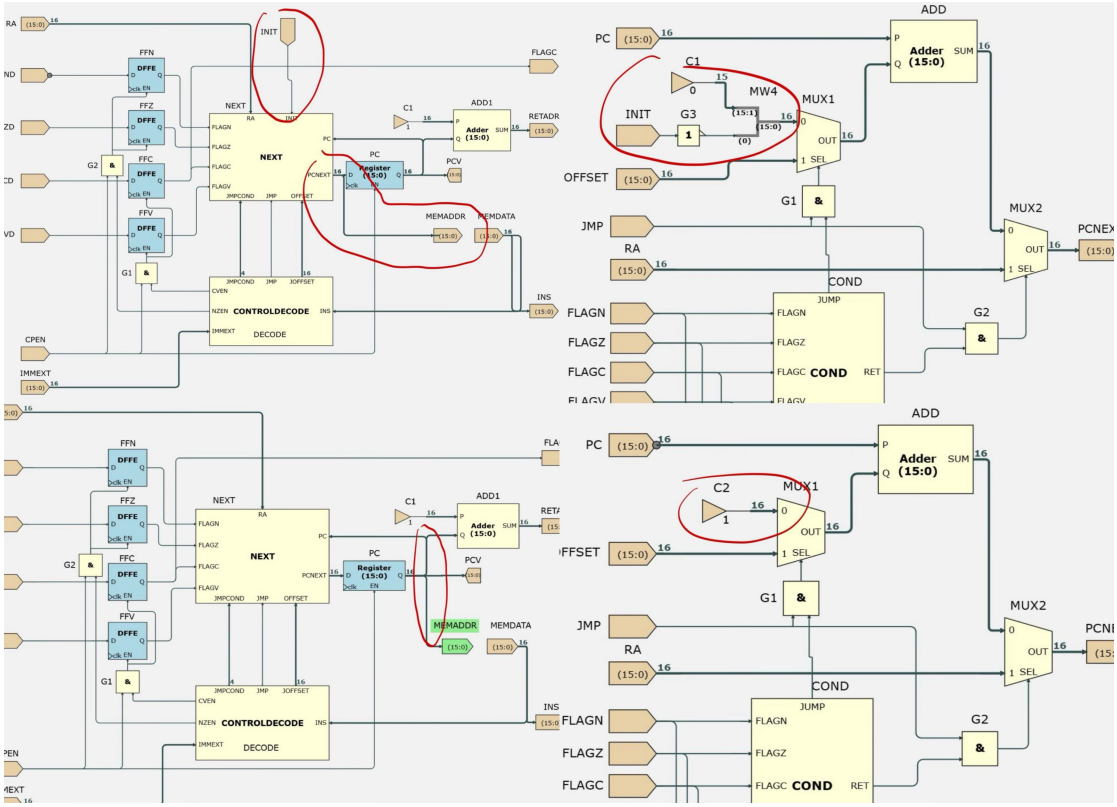

2.2 Why PCNEXT Drives MEMADDR in the Pipeline

Why does PCNEXT drive MEMADDR rather than PC?

In the pipelined design, FETCH and EXEC1 occur simultaneously for consecutive instructions. While the current instruction is being executed in EXEC1, the next instruction must already be fetched from memory. This requires the memory address bus to carry the address of the next instruction (PCNEXT) rather than the address of the instruction currently in EXEC1 (PC).

There is an inherent delay between placing an address on MEMADDR and the instruction appearing at INS (the fetch latency through the instruction memory and INSREG). By driving MEMADDR with PCNEXT one cycle earlier, the correct next instruction arrives at INSREG.Q at exactly the right time to enter EXEC1, maintaining uninterrupted pipeline flow.

2.3 Role of the INIT Signal in the Pipelined NEXT Module

What does the INIT signal do, and why is it needed?

In the pipelined NEXT module, the INIT signal generates the sequence 1, 0, 0, 0, … It holds PC constant for the first clock cycle (cycle 0) because during that cycle only a FETCH is performed — no instruction has yet been executed — so the PC must not advance. From cycle 1 onwards, INIT = 0 and PC increments normally by +1 (or follows a jump). This ensures the pipeline starts up correctly without executing a spurious instruction.